ENERBLUE

# HP90

Nominal thermal power 11 ÷ 118 kW

High efficiency air/water and water/water heat pumps with $CO_2$ refrigerant

ENERBLUE

# INDEX


**1** Introduction _____ p. 5

**2** AIR-WATER

2.1 Technical features _____ p. 15
2.2 Technical specifications _____ p. 18
2.3 Operating limits _____ p. 24
2.4 System diagrams _____ p. 25
2.5 Circulator head curves _____ p. 26
2.6 Dimensional drawings _____ p. 27

**3** WATER-WATER

3.1 Technical features _____ p. 35
3.2 Technical specifications _____ p. 38
3.3 Operating limits _____ p. 44
3.4 System diagrams _____ p. 45
3.5 Circulator head curves _____ p. 46
3.6 Dimensional drawings _____ p. 47

# HP90

**The *HP90 Air-water* and *HP90W Water-water* range of units are designed for the production of high temperature hot water for residential, commercial, tourist and industrial applications.**

R744

**The ranges operate with refrigerant R744, better known as $CO_2$ and ensure a water production temperature up to 90° with an external temperature of -20°**

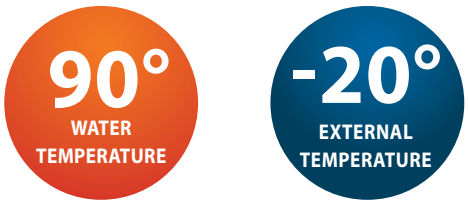


**This natural refrigerant is absolutely unique and features a series of advantages:**

## THE MAIN ADVANTAGES ARE:

**Average savings of 30/50% compared to traditional gas boilers**

**Production of hot water up to 90°**

**Production of water at constant temperature, regardless of the external air temperature**

**Production of 500 to 3000 litres of hot water in one hour**

**Intelligent management of up to 4 units in parallel**

**Supervision via web of the unit or system**

**Possibility of cold recovery**

**Maximum COP in all operating conditions**

The technical specifications contained in the documentation are not binding. Enerblue reserves the right to make any modifications it deems necessary at any time for product improvement.

# APPLICATIONS

**The HP90 ranges are ideal for structures or businesses that require large amounts of hot water on a daily basis. Ideal for many activities with different requirements:**

- Hospitals
- Shopping centres
- Tourist complexes
- Slaughterhouses
- Paper mills
- Tanneries
- Textile factories
- Bakeries
- Hotels
- Nurseries
- Rest homes
- Gyms and sport centres
- Camping sites
- Launderettes
- Canteens
- Schools
- Restaurants

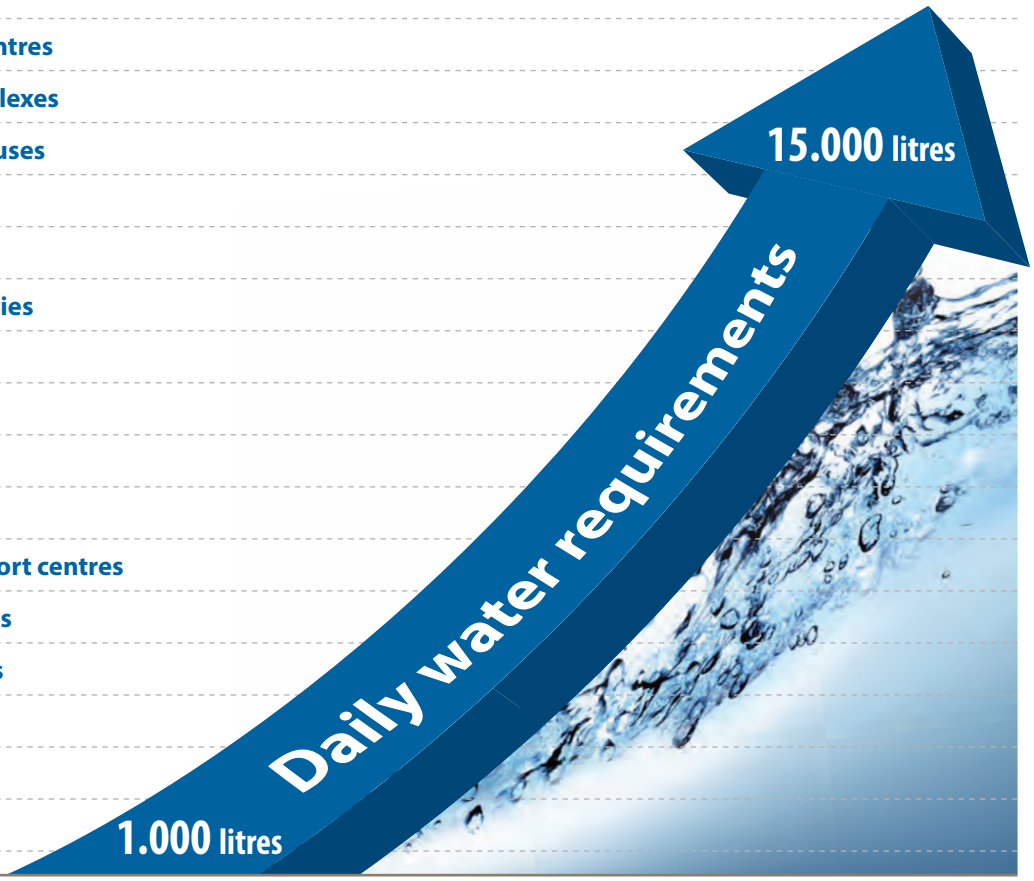




## USES

- Hygiene
- Sanitisation
- Washing
- Production cycle
- Any application that requires large amounts of water at high temperature for non-recoverable use.



The technical specifications contained in the documentation are not binding. Enerblue reserves the right to make any modifications it deems necessary at any time for product improvement.

# COMPARISON OF OPERATING COSTS

**The HP90 heat pumps ensure high savings in operating costs when compared to traditional systems: gas or diesel boiler**

| Type | GAS BOILER | HP90 |
|---|---|---|
| **Efficiency/COP*** | 0.9 | 4.0 |
| **Cost of 1 thermal kWh** | € 0.08 | € 0.045 |
| **Costs for 20,000 thermal kWh** | € 16,000 | € 9,000 |
| **Difference in %** | **100%** | **- 44%** |

*COP with air 7° water 15°-60°

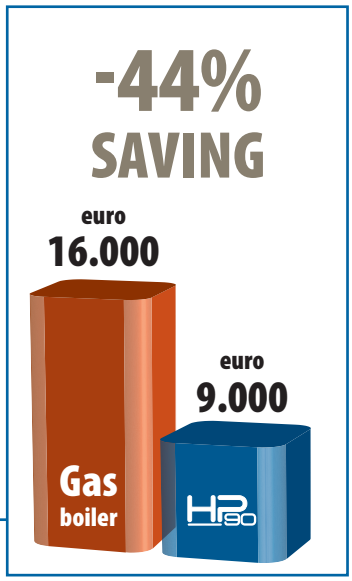


| Type | DIESEL BOILER | HP90 |
|---|---|---|
| **Efficiency/COP*** | 0.9 | 4.0 |
| **Cost of 1 thermal kWh** | € 0.148 | € 0.045 |
| **Costs for 20,000 thermal kWh** | € 29,600 | € 9,000 |
| **Difference in %** | **100%** | **- 69%** |

*COP with air 7° water 15°-60°

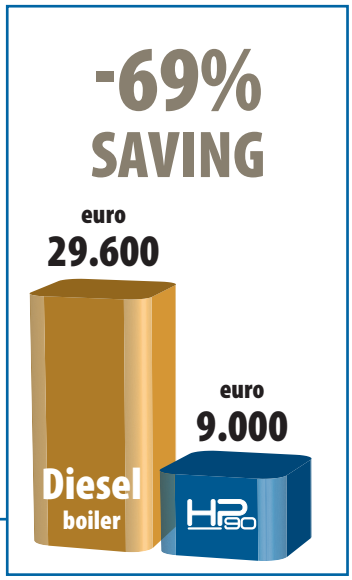


The additional costs for the boilers were not considered in the calculations:
> Absence of costs for fuel systems (gas lines, gas tanks, etc...)
> Absence of maintenance required by law
> Absence of authorisations to be requested
> Lower emission of $CO_2$

**AVERAGE SAVINGS ABOVE 44%**

Calculation conditions
> Cost of 1 electric kW: 0.18 €/kW [www.autorita.energia.it, March 2014]
> Cost of 1 m3 of gas € 0.83 per m3 (calorific value 8250 kcal/m3) [ www.autorità.energia.it, March 2014]
> Cost of 1 l of diesel € 1.399 per l (calorific value 10210 kcal/kg; specific weight 0.85kg/l)
> [dgerm.sviluppoeconomico.gov.it, March 2014]

*The technical specifications contained in the documentation are not binding. Enerblue reserves the right to make any modifications it deems necessary at any time for product improvement.*

# OPERATING PRINCIPLE

## PRINCIPLE DIAGRAM

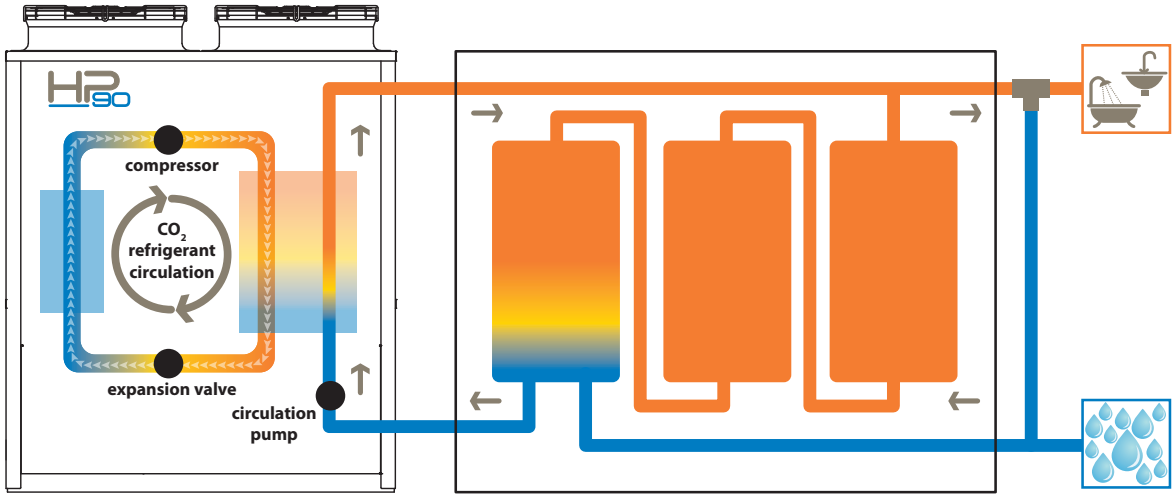




## THE HEAT PUMP OPERATES IN TWO ALTERNATIVE WAYS:

1

### Heating the hot water coming from the aqueduct instantaneously

The Heat Pump works exactly like a boiler, raising the temperature of the water from the aqueduct from 10-12 ° to the desired temperature: 60-70-80 or 90° directly without having to wait. Once the unit is switched on, it immediately produces the desired outlet temperature value, via continuous internal adjustments, in any external conditions.

2

### Heating water of a storage tank system

The Heat Pump keeps a set of thermal storage units warm. The connection in series of several storage tanks ensure a high stratification required for the high thermal efficiency values of the unit. Through temperature sensors located in the storage tanks, the unit constantly supplies a reserve of water at the desired temperature.

**THE HEAT PUMP SWITCHES FROM ONE OPERATING MODE TO ANOTHER AUTOMATICALLY IN ORDER TO SATISFY ALL THE UTILITIES IN ALL CONDITIONS.**



*The technical specifications contained in the documentation are not binding. Enerblue reserves the right to make any modifications it deems necessary at any time for product improvement.*

# PRODUCTION OF WATER AT CONSTANT TEMPERATURE

The electronic control, purposely designed and tested for this application, ensures

**a practically constant outlet water temperature, regardless of the external**

air (for air-water unit) or water (for water-water unit) conditions.

This function, unique on the market, operates via the accurate control of the internal unit parameters and thanks to an electronic circulator pump with variable flow. The control always ensures that the temperature of the outlet water never deviates by more than 2° C.

## IN WINTER

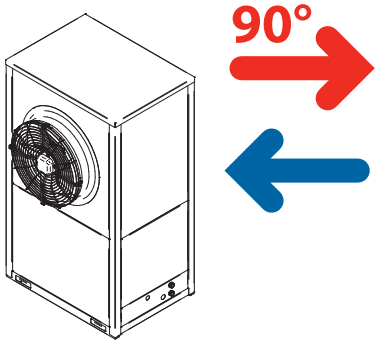


## IN ALL SEASONS

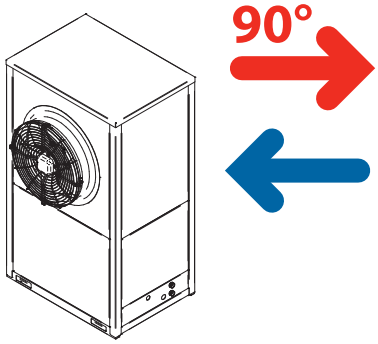


**CONSTANT OUTLET WATER TEMPERATURE IN ALL CONDITIONS!**



*The technical specifications contained in the documentation are not binding. Enerblue reserves the right to make any modifications it deems necessary at any time for product improvement.*

# INTELLIGENT MANAGEMENT OF UP TO 4 UNITS IN PARALLEL

The Miniboss M is a system enabling 4 units in the same system to be connected and managed.

The main functions are:
> Management of up to 4 units of different size
> Temperature management of several tanks

The control ensures integrated operation of several units within a single system.

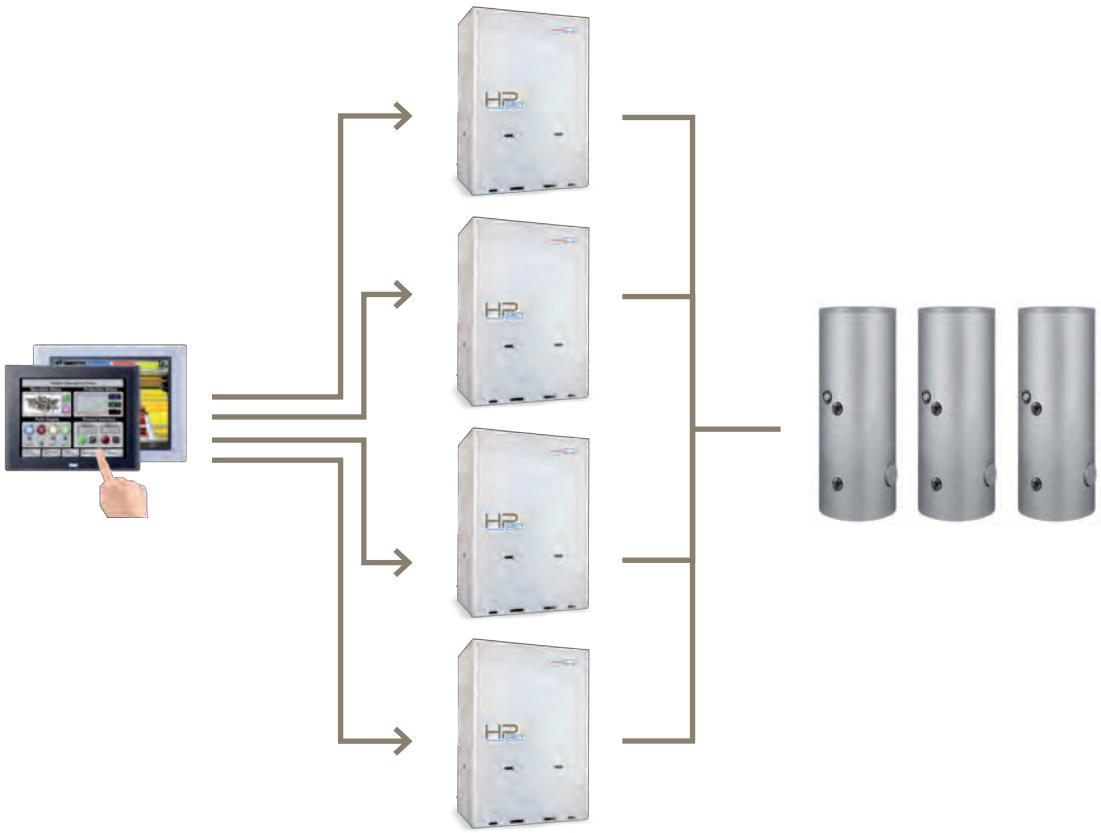

**TOTAL CONTROL OF UP TO 4 UNITS**





The technical specifications contained in the documentation are not binding. Enerblue reserves the right to make any modifications it deems necessary at any time for product improvement.

# UNIT SUPERVISION VIA WEB

The unit control may include a Web Server for continuous monitoring of all the unit parameters and status.
It also allows you to alter the operating set points without being physically in front of the unit.
The unit can be controlled within a Lan network or directly via the web.

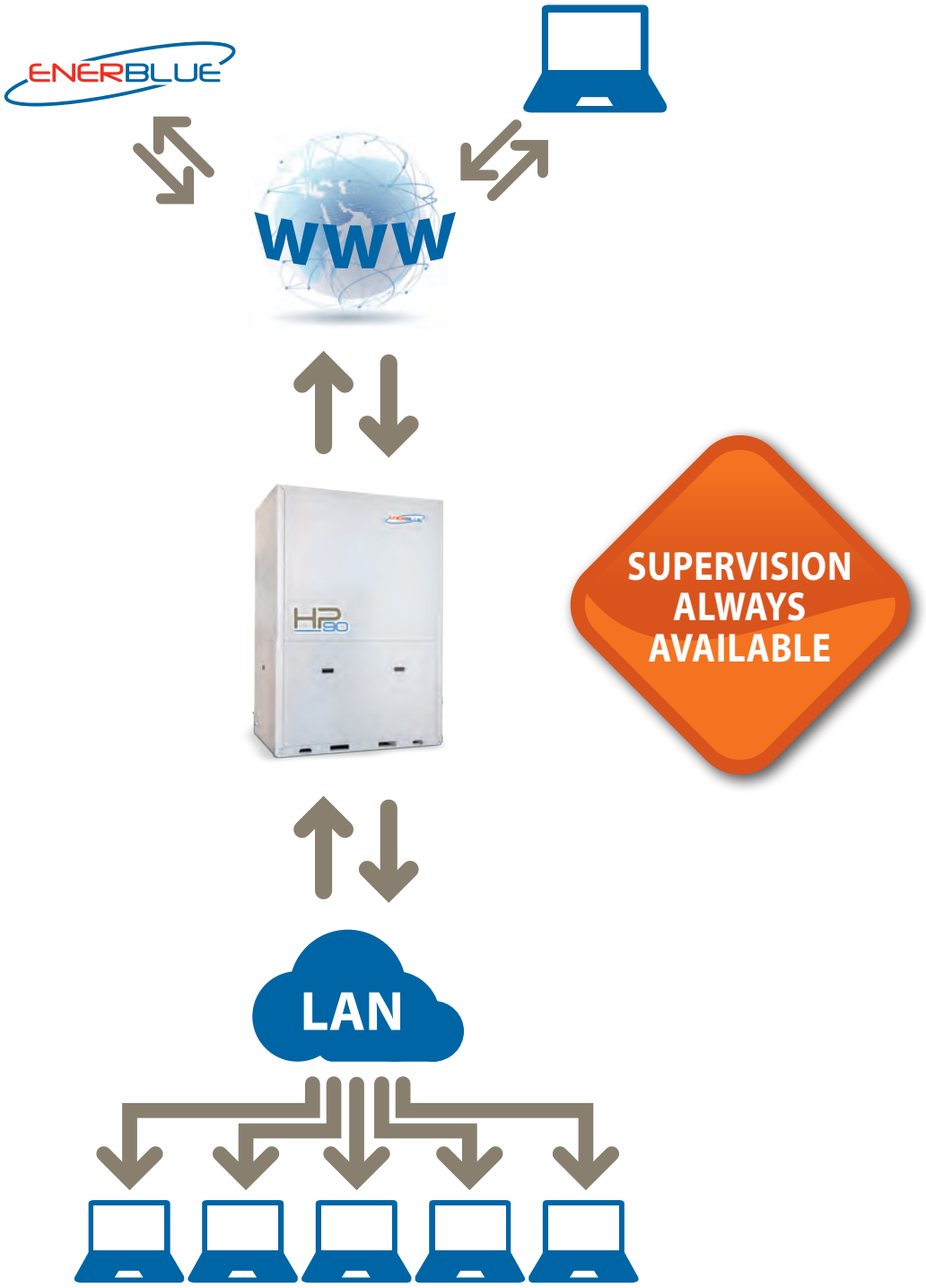






The technical specifications contained in the documentation are not binding. Enerblue reserves the right to make any modifications it deems necessary at any time for product improvement.

# COLD RECOVERY OPERATION: RF VERSION

Using an HP90 unit with cold recovery allows you to cool the rooms for free, if there is a request from the air conditioning system.
During the production of domestic hot water, instead of cooling the air, it is possible to cool the system water.
In this case the energy savings increase significantly when compared to a chiller + boiler solution, leading to EFFICIENCY values above 7.0.

## Domestic hot water only

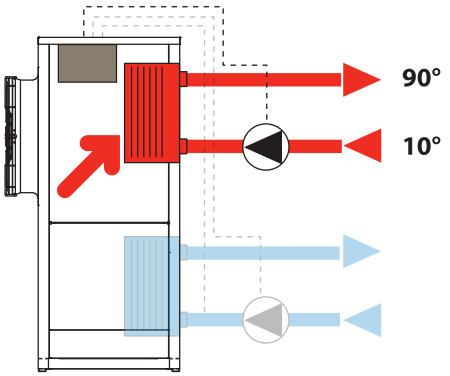


## Domestic hot water + chilled water

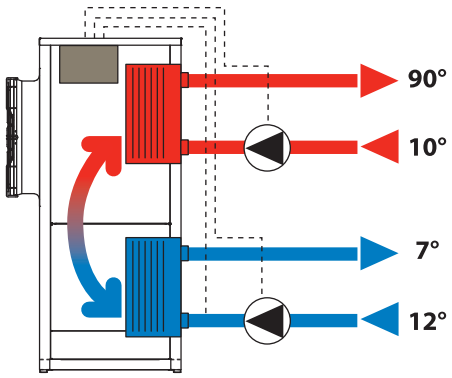


**COLD WATER AT ZERO COST**



The technical specifications contained in the documentation are not binding. Enerblue reserves the right to make any modifications it deems necessary at any time for product improvement.

# ELECTRONIC CONTROL: MAXCOP® ALGORITHM

The electronic control fitted in the HP90 range is a proprietary control.
The control continuously monitors all the unit parameters, ensuring proper operation and maximising the unit COP at all times.
In the units with refrigerant R744, the maximum thermal efficiency value depends on the domestic hot water production temperature as well as on the external temperature and on the water return temperature.
There is a special algorithm within the control that searches for the operating pressure in order to optimise the COP. Once this value has been identified, the control modifies the unit status to ensure the desired set temperature as well as the maximum COP value.

The technical specifications contained in the documentation are not binding. Enerblue reserves the right to make any modifications it deems necessary at any time for product improvement.

# AIR-WATER

# STANDARD UNIT

## STRUCTURE

The unit is made of sheet metal, with RAL 9018 epoxy-polyester powder coating, with removable panels for ease of access for maintenance and installation.

## COMPRESSOR

The compressors are of the next generation semi-hermetic piston type.
These compressors have been purposely designed to be used for heating with refrigerant R744.
The compressor reaches its maximum efficiency during hot mode operation, with high compression ratios, for the production of water at high temperature.
The compressor is equipped with thermal protection, oil level indicator light and crankcase electrical heater and is mounted on rubber vibration dampers to reduce the transmission of vibrations to the unit.
The compressor is also equipped with an internal oil cooling system.

## SOURCE SIDE HEAT EXCHANGER

It consists of a coil with copper pipes and aluminium fins with a large exchange surface. An antifreeze resistance fitted at the bottom of the condensation collection tray ensures the outflow of water towards the drain.
The finned tube bundle is protected by metal mesh (accessory).
The wide spaces between the fins reduce the possibility of the battery freezing, resulting in significantly reducing the amount of defrosting cycles during operations.
This technical feature, combined with the significant size of the evaporating section, ensure high operating temperatures and therefore high COP values.

## SYSTEM SIDE HEAT EXCHANGER

The heat exchanger features brazed plates made of AISI 316 stainless steel with closed cell thermal insulation, ideal for reducing heat loss; it also features a temperature probe for frost protection, connected to the control. The exchange of heat takes place in countercurrent to optimise the values of COP and allow the unit to reach high temperatures. The accurate selection of the exchangers ensures extremely low pressure drops on the water side.

## FANS

Axial fans directly coupled to the 6-pole electric motor with external rotor, protection rating IP 54. Each fan is housed in shaped nozzles and includes a protective safety grille in compliance with UNI EN 294.
The fans have limited operation to reduce noise. The revolution regulator, as standard, modulates the air flow to reduce noise.

## REFRIGERANT CIRCUIT

Includes: compressor, system side plate heat exchanger, regenerative heat exchanger, source side finned tube bundle, inlet valves, suction filter, electronic thermostatic expansion valve, high and low pressure switches, low pressure safety valve, high pressure safety valve, liquid receiver, service taps.

The technical specifications contained in the documentation are not binding. Enerblue reserves the right to make any modifications it deems necessary at any time for product improvement.

## HYDRAULIC CIRCUIT

The basic unit version features a circulator or pump on the system side. The circulator is controlled directly by the control unit. Depending on the required water outlet set point, the flow rate will vary in order to reach the set temperature and to maximise the COP value.

## ELECTRIC PANEL

With general disconnection device, protection of power and auxiliary circuits, compressor contactor, microprocessor control with display of the main functions.
The electric panel consists of:

> Circuit breaker to protect the auxiliary and power circuits
> Isolating switch and fuses to protect the auxiliary and power circuits
> Compressor contactor
> Fan revolution regulator for condensation control
> Pump relay or motor protection and contactor
> General alarm dry contacts

Main control functions:

> Utility set point temperature control
> Circulator/pump management
> Antifreeze protection management for heat exchanger on system side
> Compressor operating cycle timing management.

## CONTROLS AND SAFETY DEVICES

> High pressure switch with automatic reset (to defined values)
> Low pressure switch with automatic reset
> Low pressure safety valve
> High pressure safety valve
> Outlet water temperature control probe
> Gas cooler refrigerant outlet temperature control probe
> External air temperature probe
> Suction temperature probe
> Evaporation temperature probe
> High pressure probe
> Low pressure probe
> Antifreeze probe on system side heat exchanger outlet
> Mechanical pallet flow switch
> Compressor over-temperature protection

## TESTING

All the units are tested at the factory and are despatched filled with oil. The units are shipped without refrigerant. At the time of the order please provide the required operating values.

The technical specifications contained in the documentation are not binding. Enerblue reserves the right to make any modifications it deems necessary at any time for product improvement.

# Technical specifications of air/water UNIT

| UNIT SIZE | | | 18 | 24 | 48 | 100 |
|---|---|---|---|---|---|---|
| **Conditions** | **Performance** | | | | | |
| External air: -7°C<br>Water in/out: 10° -> 90°C | Thermal P. [kW] | | 11.0 | 17.3 | 32.7 | 65.3 |
| | Absorbed power [kW] | (1) | 3.8 | 5.9 | 10.9 | 21.6 |
| | COP | | 2.89 | 2.95 | 2.99 | 3.02 |
| | Water flow rate [l/h] | | 118 | 186 | 352 | 702 |
| External air: 0°C<br>Water in/out: 10° -> 70°C | Thermal P. [kW] | | 13.1 | 20.7 | 38.9 | 77.8 |
| | Absorbed power [kW] | (1) | 4.1 | 6.3 | 11.8 | 23.3 |
| | COP | | 3.20 | 3.26 | 3.31 | 3.34 |
| | Water flow rate [l/h] | | 188 | 297 | 556 | 1115 |
| External air:7°C<br>Water in/out: 10° -> 90°C | Thermal P. [kW] | | 15.8 | 24.9 | 46.9 | 93.9 |
| | Absorbed power [kW] | (1) | 4.5 | 7.0 | 12.9 | 25.6 |
| | COP | | 3.51 | 3.58 | 3.63 | 3.67 |
| | Water flow rate [l/h] | | 170 | 268 | 504 | 1009 |
| External air:15°C<br>Water in/out: 15° -> 65°C | Thermal P. [kW] | | 17.9 | 28.3 | 53.2 | 106.3 |
| | Absorbed power [kW] | (1) | 4.3 | 6.7 | 12.3 | 24.4 |
| | COP | | 4.17 | 4.25 | 4.31 | 4.36 |
| | Water flow rate [l/h] | | 309 | 487 | 915 | 1828 |
| External air:20°C<br>Water in/out: 15° -> 90°C | Thermal P. [kW] | | 20.0 | 31.6 | 59.4 | 118.8 |
| | Absorbed power [kW] | (1) | 5.1 | 7.9 | 14.6 | 29.0 |
| | COP | | 3.92 | 4.00 | 4.06 | 4.10 |
| | Water flow rate [l/h] | | 229 | 362 | 681 | 1362 |

(1) Absorbed power [kW] Compressor + fans absorbed power

The technical specifications contained in the documentation are not binding. Enerblue reserves the right to make any modifications it deems necessary at any time for product improvement.

# Technical specifications of AIR/WATER unit

| UNIT SIZE | | | 18 | 24 | 48 | 100 |
|---|---|---|---|---|---|---|
| **Dimensions** | | | | | | |
| Length | | mm | 1092 | 1408 | 2228 | 2806 |
| Height | | mm | 1880 | 2015 | 2015 | 1203 |
| Depth | | mm | 792 | 908 | 908 | 2390 |
| Weight | | kg | 540 | 650 | 1100 | 1450 |
| **Noise** | | | | | | |
| Sound pressure | (1) | dB(A) | 45 | 48 | 55 | 62 |
| **Noise LN version** | | | | | | |
| Sound pressure | (1) | dB(A) | 43 | 45 | 52 | 60 |
| **Ventilation** | | | | | | |
| No. of fans | | | 1 | 2 | 3 | 2 |
| Individual fan max P. | | kw | 0.6 | 0.6 | 0.6 | 1.94 |
| Individual fan max I | | A | 2.62 | 2.62 | 2.62 | 3.9 |
| Unit air flow rate | | $m^3/h$ | 5000 | 12000 | 21000 | 44000 |
| **Circulator/pump** | | | | | | |
| Type | | | circulator | circulator | circulator | circulator |
| Control | | | Signal 0-10 V | Signal 0-10 V | Signal 0-10 V | Signal 0-10 V |
| Pump max. P. | | W | 5-70 | 5-70 | 5-70 | 8-130 |
| Motor protection | | | Present | Present | Present | Present |
| Operating temperature | | °C | -10° to +95° | -10° to +95° | -10° to +95° | -10° to +95° |
| Maximum operating pressure | | bar | 6 | 6 | 6 | 6 |
| **Unit electric data** | | | | | | |
| Power supply | | | 400V/3~+N/50 Hz | 400V/3~+N/50 Hz | 400V/3~+N/50 Hz | 400V/3~+N/50 Hz |
| Unit max. abs. power | (2) | kw | 7 | 11 | 18 | 33 |
| Max. absorbed current | (3) | A | 13 | 26 | 35 | 66 |
| Start-up current | (4) | A | 47 | 112 | 145 | 233 |
| **Compressor** | | | | | | |
| Compressor type | | | semi-hermetic | semi-hermetic | semi-hermetic | semi-hermetic |
| Crankcase heater | | W | 100 | 200 | 200 | 200 |
| Over-temperature safety device | | | Internal | Internal | Internal | Internal |
| Oil cooling | | | Internal | Internal | Internal | Internal |
| Oil quantity | | kg | 1.3 | 2.5 | 2.5 | 2.5 |
| Oil type | | | 3MRP18 | 3MRP18 | 3MRP18 | 3MRP18 |
| Type | | | Polyester | Polyester | Polyester | Polyester |
| **Hydronic circuit** | | | | | | |
| Water IN connection | | " | 1" | 1"1/2 | 1"1/2 | 2" |
| Water OUT connection | | " | 1" | 1"1/2 | 1"1/2 | 2" |
| Max. allowable pressure | | bar | 6 | 6 | 6 | 6 |
| **Unit general data** | | | | | | |
| Number of compressors/circuits | | no. | 1/1 | 1/1 | 1/1 | 1/1 |
| Refrigerant | | | R744 (CO2) | R744 (CO2) | R744 (CO2) | R744 (CO2) |
| Type of defrosting | | | Hot gas | Hot gas | Hot gas | Hot gas |
| HP maximum pressure | | bar | 120 | 120 | 120 | 120 |
| LP maximum pressure | | bar | 80 | 80 | 80 | 80 |
| Colour | | | RAL 9018 | RAL 9018 | RAL 9018 | RAL 9018 |

(1) Sound pressure level in free field at 10 m on compressor compartment side. Air operation +15°C water 15°-65°
(2) Electric power that must be available from the mains for unit operation
(3) Current at which the protection devices intervene within the unit. It is the maximum current absorbed by the unit. This value is never exceeded and must be used for sizing the line and relative protection devices (refer to the wiring diagram provided with the units).
(4) Maximum start-up current calculated considering the start-up of the compressor with greater power and the maximum current absorbed by all the other devices.

*The technical specifications contained in the documentation are not binding. Enerblue reserves the right to make any modifications it deems necessary at any time for product improvement.*

| MODEL 18 | | | | | | | | | | | | |
|---|---|---|---|---|---|---|---|---|---|---|---|---|
| WATER IN/OUT [°C] | PERFORMANCE | | EXTERNAL AIR [°C] | | | | | | | | | |
| | | | -20 | -15 | -10 | -5 | 0 | 5 | 10 | 15 | 20 | 25 |
| Water 10 > 60 | Thermal P. [kW] | | 8.6 | 8.9 | 10.2 | 11.7 | 13.2 | 15 | 16.7 | 18.5 | 20.8 | 20.8 |
| | Absorbed power [kW] | (1) | 3 | 3.1 | 3.3 | 3.5 | 3.8 | 3.9 | 3.9 | 3.9 | 4.1 | 4.1 |
| | COP | | 2.86 | 2.91 | 3.1 | 3.34 | 3.47 | 3.85 | 4.28 | 4.74 | 5.07 | 5.07 |
| | Water flow rate [l/h] | | 148 | 153 | 175 | 201 | 227 | 258 | 287 | 318 | 358 | 358 |
| Water 10 > 70 | Thermal P. [kW] | | 8.7 | 9 | 10.1 | 11.7 | 13.2 | 15 | 16.8 | 18.6 | 20.8 | 20.8 |
| | Absorbed power [kW] | (1) | 3.2 | 3.3 | 3.5 | 3.7 | 3.9 | 4.1 | 4.3 | 4.4 | 4.6 | 4.6 |
| | COP | | 2.71 | 2.71 | 2.89 | 3.16 | 3.38 | 3.66 | 3.91 | 4.23 | 4.52 | 4.52 |
| | Water flow rate [l/h] | | 125 | 129 | 145 | 168 | 189 | 215 | 241 | 267 | 298 | 298 |
| Water 10 > 80 | Thermal P. [kW] | | 8.7 | 8.9 | 10.2 | 11.5 | 13.1 | 15 | 16.8 | 18.6 | 20.6 | 20.6 |
| | Absorbed power [kW] | (1) | 3.4 | 3.4 | 3.7 | 3.9 | 4.2 | 4.4 | 4.7 | 4.8 | 5 | 5 |
| | COP | | 2.56 | 2.62 | 2.76 | 2.95 | 3.12 | 3.41 | 3.57 | 3.88 | 4.12 | 4.12 |
| | Water flow rate [l/h] | | 107 | 109 | 125 | 141 | 161 | 184 | 206 | 229 | 253 | 253 |
| Water 15 > 60 | Thermal P. [kW] | | 8.4 | 8.6 | 9.7 | 11.2 | 12.7 | 14.3 | 16.1 | 17.8 | 19.5 | 19.5 |
| | Absorbed power [kW] | (1) | 3.1 | 3.1 | 3.3 | 3.6 | 3.8 | 4 | 4 | 4.1 | 4.1 | 4.1 |
| | COP | | 2.71 | 2.77 | 2.94 | 3.11 | 3.34 | 3.58 | 4.03 | 3.34 | 4.76 | 4.76 |
| | Water flow rate [l/h] | | 161 | 164 | 185 | 214 | 243 | 273 | 308 | 340 | 373 | 373 |
| Water 15 > 70 | Thermal P. [kW] | | 8.2 | 8.5 | 9.7 | 11.1 | 12.7 | 14.3 | 16.1 | 17.9 | 19.6 | 19.6 |
| | Absorbed power [kW] | (1) | 3.2 | 3.3 | 3.5 | 3.8 | 4 | 4.2 | 4.3 | 4.5 | 4.6 | 4.6 |
| | COP | | 2.57 | 2.59 | 2.77 | 2.92 | 3.18 | 3.43 | 3.74 | 3.98 | 4.26 | 4.26 |
| | Water flow rate [l/h] | | 128 | 133 | 152 | 174 | 199 | 224 | 252 | 280 | 306 | 306 |
| Water 15 > 80 | Thermal P. [kW] | | 8.1 | 8.4 | 9.7 | 11.1 | 12.7 | 14.4 | 16.1 | 17.9 | 19.6 | 19.6 |
| | Absorbed power [kW] | (1) | 3.3 | 3.4 | 3.7 | 3.9 | 4.2 | 4.4 | 4.7 | 4.9 | 5 | 5 |
| | COP | | 2.45 | 2.47 | 2.62 | 2.85 | 3.02 | 3.27 | 3.43 | 3.65 | 3.92 | 3.92 |
| | Water flow rate [l/h] | | 107 | 111 | 128 | 147 | 168 | 191 | 213 | 237 | 259 | 259 |
| Water 20 > 60 | Thermal P. [kW] | | 8 | 8.3 | 9.2 | 10.7 | 12.2 | 13.8 | 15.5 | 17.1 | 18.4 | 18.4 |
| | Absorbed power [kW] | (1) | 3.1 | 3.2 | 3.3 | 3.6 | 3.8 | 4 | 4.1 | 4.1 | 4.1 | 4.1 |
| | COP | | 2.57 | 2.59 | 2.79 | 2.97 | 3.21 | 3.45 | 3.78 | 4.17 | 4.49 | 4.49 |
| | Water flow rate [l/h] | | 172 | 178 | 198 | 230 | 262 | 297 | 333 | 368 | 396 | 396 |
| Water 20 > 70 | Thermal P. [kW] | | 7.8 | 8.1 | 9.4 | 10.6 | 12.2 | 13.8 | 15.4 | 17.3 | 18.5 | 18.5 |
| | Absorbed power [kW] | (1) | 3.2 | 3.3 | 3.5 | 3.7 | 4 | 4.2 | 4.4 | 4.6 | 4.6 | 4.6 |
| | COP | | 2.43 | 2.46 | 2.69 | 2.86 | 3.05 | 3.28 | 3.5 | 3.76 | 4.02 | 4.02 |
| | Water flow rate [l/h] | | 134 | 139 | 162 | 182 | 210 | 237 | 265 | 298 | 318 | 318 |
| Water 20 > 80 | Thermal P. [kW] | | 7.5 | 7.9 | 9.2 | 10.7 | 12.3 | 13.8 | 15.5 | 17.3 | 18.5 | 18.5 |
| | Absorbed power [kW] | (1) | 3.3 | 3.4 | 3.7 | 4 | 4.3 | 4.5 | 4.7 | 4.9 | 5 | 5 |
| | COP | | 2.28 | 2.32 | 2.49 | 2.68 | 2.86 | 3.07 | 3.29 | 3.52 | 3.7 | 3.7 |
| | Water flow rate [l/h] | | 108 | 113 | 132 | 153 | 176 | 198 | 222 | 248 | 265 | 265 |

(1) Absorbed power [kW] Compressor + fans absorbed power

Absorbed power [kW]: Compressor + fans absorbed power
For external air temperatures exceeding 25° the performance remains constant
For inlet water temperatures below 10° the performance remains constant

*The technical specifications contained in the documentation are not binding. Enerblue reserves the right to make any modifications it deems necessary at any time for product improvement.*

# Technical specifications of air/water UNIT

| MODEL 24 | | | | | | | | | | | |
|---|---|---|---|---|---|---|---|---|---|---|---|
| WATER IN/OUT [°C] | PERFORMANCE | | EXTERNAL AIR [°C] | | | | | | | | | |
| | | | -20 | -15 | -10 | -5 | 0 | 5 | 10 | 15 | 20 | 25 |
| Water 10 > 60 | Thermal P. [kW] | | 13.6 | 14.1 | 16.1 | 18.5 | 20.9 | 23.7 | 26.4 | 29.2 | 32.9 | 32.9 |
| | Absorbed power [kW] | (1) | 4.7 | 4.7 | 5.1 | 5.4 | 5.9 | 6.0 | 6.0 | 6.0 | 6.4 | 6.4 |
| | COP | | 2.92 | 2.97 | 3.16 | 3.41 | 3.54 | 3.93 | 4.37 | 4.83 | 5.17 | 5.17 |
| | Water flow rate [l/h] | | 234 | 242 | 277 | 318 | 359 | 408 | 454 | 503 | 565 | 565 |
| Water 10 > 70 | Thermal P. [kW] | | 13.7 | 14.2 | 16.0 | 18.5 | 20.9 | 23.7 | 26.5 | 29.4 | 32.9 | 32.9 |
| | Absorbed power [kW] | (1) | 5.0 | 5.1 | 5.4 | 5.7 | 6.0 | 6.3 | 6.7 | 6.8 | 7.1 | 7.1 |
| | COP | | 2.76 | 2.76 | 2.95 | 3.22 | 3.45 | 3.73 | 3.99 | 4.31 | 4.61 | 4.61 |
| | Water flow rate [l/h] | | 197 | 204 | 229 | 265 | 299 | 340 | 380 | 421 | 471 | 471 |
| Water 10 > 80 | Thermal P. [kW] | | 13.7 | 14.1 | 16.1 | 18.2 | 20.7 | 23.7 | 26.5 | 29.4 | 32.5 | 32.5 |
| | Absorbed power [kW] | (1) | 5.3 | 5.3 | 5.7 | 6.0 | 6.5 | 6.8 | 7.3 | 7.4 | 7.7 | 7.7 |
| | COP | | 2.61 | 2.67 | 2.82 | 3.01 | 3.18 | 3.48 | 3.64 | 3.96 | 4.20 | 4.20 |
| | Water flow rate [l/h] | | 169 | 173 | 198 | 223 | 254 | 291 | 326 | 361 | 400 | 400 |
| Water 15 > 60 | Thermal P. [kW] | | 13.3 | 13.6 | 15.3 | 17.7 | 20.1 | 22.6 | 25.4 | 28.1 | 30.8 | 30.8 |
| | Absorbed power [kW] | (1) | 4.8 | 4.8 | 5.1 | 5.6 | 5.9 | 6.2 | 6.2 | 8.3 | 6.3 | 6.3 |
| | COP | | 2.76 | 2.83 | 3.00 | 3.17 | 3.41 | 3.65 | 4.11 | 3.41 | 4.86 | 4.86 |
| | Water flow rate [l/h] | | 254 | 260 | 293 | 338 | 383 | 432 | 486 | 537 | 589 | 589 |
| Water 15 > 70 | Thermal P. [kW] | | 13.0 | 13.4 | 15.3 | 17.5 | 20.1 | 22.6 | 25.4 | 28.3 | 31.0 | 31.0 |
| | Absorbed power [kW] | (1) | 4.9 | 5.1 | 5.4 | 5.9 | 6.2 | 6.5 | 6.7 | 7.0 | 7.1 | 7.1 |
| | COP | | 2.62 | 2.64 | 2.83 | 2.98 | 3.24 | 3.50 | 3.81 | 4.06 | 4.35 | 4.35 |
| | Water flow rate [l/h] | | 203 | 210 | 240 | 274 | 314 | 353 | 398 | 442 | 484 | 484 |
| Water 15 > 80 | Thermal P. [kW] | | 12.8 | 13.3 | 15.3 | 17.5 | 20.1 | 22.8 | 25.4 | 28.3 | 31.0 | 31.0 |
| | Absorbed power [kW] | (1) | 5.1 | 5.3 | 5.7 | 6.0 | 6.5 | 6.8 | 7.3 | 7.6 | 7.7 | 7.7 |
| | COP | | 2.50 | 2.52 | 2.67 | 2.91 | 3.08 | 3.34 | 3.50 | 3.72 | 4.00 | 4.00 |
| | Water flow rate [l/h] | | 169 | 176 | 203 | 232 | 265 | 301 | 337 | 374 | 410 | 410 |
| Water 20 > 60 | Thermal P. [kW] | | 12.6 | 13.1 | 14.5 | 16.9 | 19.3 | 21.8 | 24.5 | 27.0 | 29.1 | 29.1 |
| | Absorbed power [kW] | (1) | 4.8 | 5.0 | 5.1 | 5.6 | 5.9 | 6.2 | 6.4 | 6.4 | 6.3 | 6.3 |
| | COP | | 2.62 | 2.64 | 2.85 | 3.03 | 3.27 | 3.52 | 3.86 | 4.25 | 4.58 | 4.58 |
| | Water flow rate [l/h] | | 272 | 282 | 313 | 363 | 414 | 469 | 527 | 581 | 625 | 625 |
| Water 20 > 70 | Thermal P. [kW] | | 12.3 | 12.8 | 14.9 | 16.7 | 19.3 | 21.8 | 24.3 | 27.3 | 29.2 | 29.2 |
| | Absorbed power [kW] | (1) | 5.0 | 5.1 | 5.4 | 5.7 | 6.2 | 6.5 | 6.8 | 7.1 | 7.1 | 7.1 |
| | COP | | 2.48 | 2.51 | 2.74 | 2.92 | 3.11 | 3.35 | 3.57 | 3.84 | 4.10 | 4.10 |
| | Water flow rate [l/h] | | 212 | 220 | 255 | 288 | 332 | 375 | 419 | 470 | 503 | 503 |
| Water 20 > 80 | Thermal P. [kW] | | 11.9 | 12.5 | 14.5 | 16.9 | 19.4 | 21.8 | 24.5 | 27.3 | 29.2 | 29.2 |
| | Absorbed power [kW] | (1) | 5.1 | 5.3 | 5.7 | 6.2 | 6.7 | 7.0 | 7.3 | 7.6 | 7.7 | 7.7 |
| | COP | | 2.33 | 2.37 | 2.54 | 2.73 | 2.92 | 3.13 | 3.36 | 3.59 | 3.77 | 3.77 |
| | Water flow rate [l/h] | | 170 | 179 | 208 | 242 | 279 | 313 | 351 | 392 | 419 | 419 |

(1) Absorbed power [kW] Compressor + fans absorbed power

Absorbed power [kW]: Compressor + fans absorbed power
For external air temperatures exceeding 25° the performance remains constant
For inlet water temperatures below 10° the performance remains constant

*The technical specifications contained in the documentation are not binding. Enerblue reserves the right to make any modifications it deems necessary at any time for product improvement.*

# Technical specifications of air/water UNIT

| MODEL 48 | | | | | | | | | | | | |
|---|---|---|---|---|---|---|---|---|---|---|---|---|
| WATER IN/OUT [°C] | PERFORMANCE | | EXTERNAL AIR [°C] | | | | | | | | | |
| | | | -20 | -15 | -10 | -5 | 0 | 5 | 10 | 15 | 20 | 25 |
| Water 10 > 60 | Thermal P. [kW] | | 25.5 | 26.4 | 30.3 | 34.7 | 39.2 | 44.6 | 49.6 | 54.9 | 61.8 | 61.8 |
| | Absorbed power [kW] | (1) | 8.6 | 8.8 | 9.4 | 10.1 | 10.9 | 11.2 | 11.2 | 11.2 | 11.8 | 11.8 |
| | COP | | 2.96 | 3.01 | 3.21 | 3.46 | 3.59 | 3.98 | 4.43 | 4.91 | 5.25 | 5.25 |
| | Water flow rate [l/h] | | 439 | 455 | 521 | 598 | 674 | 766 | 853 | 945 | 1063 | 1063 |
| Water 10 > 70 | Thermal P. [kW] | | 25.8 | 26.7 | 30.0 | 34.7 | 39.2 | 44.6 | 49.9 | 55.2 | 61.8 | 61.8 |
| | Absorbed power [kW] | (1) | 9.2 | 9.5 | 10.0 | 10.6 | 11.2 | 11.8 | 12.3 | 12.6 | 13.2 | 13.2 |
| | COP | | 2.80 | 2.80 | 2.99 | 3.27 | 3.50 | 3.79 | 4.05 | 4.38 | 4.68 | 4.68 |
| | Water flow rate [l/h] | | 370 | 383 | 430 | 498 | 562 | 639 | 715 | 792 | 885 | 885 |
| Water 10 > 80 | Thermal P. [kW] | | 25.8 | 26.4 | 30.3 | 34.2 | 38.9 | 44.6 | 49.9 | 55.2 | 61.2 | 61.2 |
| | Absorbed power [kW] | (1) | 9.8 | 9.7 | 10.6 | 11.2 | 12.0 | 12.6 | 13.5 | 13.8 | 14.3 | 14.3 |
| | COP | | 2.65 | 2.71 | 2.86 | 3.05 | 3.23 | 3.53 | 3.69 | 4.02 | 4.26 | 4.26 |
| | Water flow rate [l/h] | | 317 | 325 | 372 | 420 | 478 | 547 | 613 | 679 | 752 | 752 |
| Water 15 > 60 | Thermal P. [kW] | | 24.9 | 25.5 | 28.8 | 33.3 | 37.7 | 42.5 | 47.8 | 52.9 | 57.9 | 57.9 |
| | Absorbed power [kW] | (1) | 8.9 | 8.9 | 9.5 | 10.3 | 10.9 | 11.5 | 11.5 | 15.3 | 11.8 | 11.8 |
| | COP | | 2.80 | 2.87 | 3.04 | 3.22 | 3.46 | 3.71 | 4.17 | 3.46 | 4.93 | 4.93 |
| | Water flow rate [l/h] | | 477 | 488 | 551 | 636 | 721 | 812 | 914 | 1010 | 1107 | 1107 |
| Water 15 > 70 | Thermal P. [kW] | | 24.4 | 25.2 | 28.8 | 33.0 | 37.7 | 42.5 | 47.8 | 53.2 | 58.2 | 58.2 |
| | Absorbed power [kW] | (1) | 9.2 | 9.4 | 10.0 | 10.9 | 11.5 | 12.0 | 12.4 | 12.9 | 13.2 | 13.2 |
| | COP | | 2.66 | 2.68 | 2.87 | 3.02 | 3.29 | 3.55 | 3.87 | 4.12 | 4.41 | 4.41 |
| | Water flow rate [l/h] | | 381 | 395 | 450 | 515 | 590 | 664 | 748 | 831 | 910 | 910 |
| Water 15 > 80 | Thermal P. [kW] | | 24.1 | 24.9 | 28.8 | 33.0 | 37.7 | 42.8 | 47.8 | 53.2 | 58.2 | 58.2 |
| | Absorbed power [kW] | (1) | 9.5 | 9.8 | 10.6 | 11.2 | 12.1 | 12.6 | 13.5 | 14.1 | 14.3 | 14.3 |
| | COP | | 2.54 | 2.56 | 2.71 | 2.95 | 3.13 | 3.38 | 3.55 | 3.78 | 4.06 | 4.06 |
| | Water flow rate [l/h] | | 318 | 330 | 381 | 436 | 499 | 566 | 633 | 703 | 770 | 770 |
| Water 20 > 60 | Thermal P. [kW] | | 23.8 | 24.7 | 27.3 | 31.8 | 36.2 | 41.0 | 46.0 | 50.8 | 54.6 | 54.6 |
| | Absorbed power [kW] | (1) | 8.9 | 9.2 | 9.5 | 10.3 | 10.9 | 11.5 | 11.8 | 11.8 | 11.8 | 11.8 |
| | COP | | 2.66 | 2.68 | 2.89 | 3.07 | 3.32 | 3.57 | 3.91 | 4.32 | 4.65 | 4.65 |
| | Water flow rate [l/h] | | 511 | 530 | 587 | 683 | 779 | 881 | 990 | 1092 | 1175 | 1175 |
| Water 20 > 70 | Thermal P. [kW] | | 23.2 | 24.1 | 27.9 | 31.5 | 36.2 | 41.0 | 45.7 | 51.4 | 54.9 | 54.9 |
| | Absorbed power [kW] | (1) | 9.2 | 9.4 | 10.0 | 10.6 | 11.5 | 12.1 | 12.6 | 13.2 | 13.2 | 13.2 |
| | COP | | 2.52 | 2.55 | 2.78 | 2.96 | 3.16 | 3.39 | 3.62 | 3.89 | 4.16 | 4.16 |
| | Water flow rate [l/h] | | 398 | 414 | 480 | 541 | 623 | 705 | 787 | 884 | 945 | 945 |
| Water 20 > 80 | Thermal P. [kW] | | 22.3 | 23.5 | 27.3 | 31.8 | 36.5 | 41.0 | 46.0 | 51.4 | 54.9 | 54.9 |
| | Absorbed power [kW] | (1) | 9.4 | 9.8 | 10.6 | 11.5 | 12.3 | 12.9 | 13.5 | 14.1 | 14.3 | 14.3 |
| | COP | | 2.36 | 2.40 | 2.58 | 2.77 | 2.96 | 3.18 | 3.41 | 3.64 | 3.83 | 3.83 |
| | Water flow rate [l/h] | | 319 | 336 | 392 | 456 | 524 | 587 | 660 | 736 | 788 | 788 |

(1) Absorbed power [kW] Compressor + fans absorbed power

Absorbed power [kW]: Compressor + fans absorbed power
For external air temperatures exceeding 25° the performance remains constant
For inlet water temperatures below 10° the performance remains constant

*The technical specifications contained in the documentation are not binding. Enerblue reserves the right to make any modifications it deems necessary at any time for product improvement.*

# Technical specifications of air/water UNIT

| MODEL 100 | | | | | | | | | | | |
|---|---|---|---|---|---|---|---|---|---|---|---|
| WATER IN/OUT [°C] | PERFORMANCE | | EXTERNAL AIR [°C] | | | | | | | | | |
| | | | -20 | -15 | -10 | -5 | 0 | 5 | 10 | 15 | 20 | 25 |
| Water 10 > 60 | Thermal P. [kW] | | 51.1 | 52.9 | 60.6 | 69.5 | 78.4 | 89.1 | 99.2 | 109.9 | 123.6 | 123.6 |
| | Absorbed power [kW] | (1) | 17.1 | 17.4 | 18.7 | 19.9 | 21.6 | 22.1 | 22.2 | 22.2 | 23.3 | 23.3 |
| | COP | | 2.99 | 3.04 | 3.24 | 3.49 | 3.63 | 4.02 | 4.47 | 4.95 | 5.30 | 5.30 |
| | Water flow rate [l/h] | | 879 | 909 | 1042 | 1195 | 1349 | 1533 | 1706 | 1890 | 2125 | 2125 |
| Water 10 > 70 | Thermal P. [kW] | | 51.7 | 53.5 | 60.0 | 69.5 | 78.4 | 89.1 | 99.8 | 110.5 | 123.6 | 123.6 |
| | Absorbed power [kW] | (1) | 18.2 | 18.9 | 19.9 | 21.0 | 22.2 | 23.3 | 24.4 | 25.0 | 26.2 | 26.2 |
| | COP | | 2.83 | 2.83 | 3.02 | 3.30 | 3.53 | 3.82 | 4.09 | 4.42 | 4.72 | 4.72 |
| | Water flow rate [l/h] | | 741 | 766 | 860 | 996 | 1124 | 1277 | 1430 | 1584 | 1771 | 1771 |
| Water 10 > 80 | Thermal P. [kW] | | 51.7 | 52.9 | 60.6 | 68.3 | 77.8 | 89.1 | 99.8 | 110.5 | 122.4 | 122.4 |
| | Absorbed power [kW] | (1) | 19.3 | 19.3 | 21.0 | 22.2 | 23.9 | 25.0 | 26.7 | 27.2 | 28.4 | 28.4 |
| | COP | | 2.68 | 2.74 | 2.88 | 3.08 | 3.26 | 3.56 | 3.73 | 4.05 | 4.31 | 4.31 |
| | Water flow rate [l/h] | | 635 | 650 | 744 | 839 | 956 | 1095 | 1226 | 1357 | 1503 | 1503 |
| Water 15 > 60 | Thermal P. [kW] | | 49.9 | 51.1 | 57.6 | 66.5 | 75.4 | 84.9 | 95.6 | 105.7 | 115.8 | 115.8 |
| | Absorbed power [kW] | (1) | 17.6 | 17.6 | 18.8 | 20.5 | 21.6 | 22.7 | 22.7 | 30.3 | 23.3 | 23.3 |
| | COP | | 2.83 | 2.89 | 3.07 | 3.25 | 3.49 | 3.74 | 4.21 | 3.49 | 4.97 | 4.97 |
| | Water flow rate [l/h] | | 954 | 976 | 1101 | 1271 | 1442 | 1623 | 1828 | 2021 | 2214 | 2214 |
| Water 15 > 70 | Thermal P. [kW] | | 48.7 | 50.5 | 57.6 | 65.9 | 75.4 | 84.9 | 95.6 | 106.3 | 116.4 | 116.4 |
| | Absorbed power [kW] | (1) | 18.1 | 18.7 | 19.9 | 21.6 | 22.7 | 23.7 | 24.5 | 25.6 | 26.2 | 26.2 |
| | COP | | 2.69 | 2.71 | 2.89 | 3.05 | 3.32 | 3.58 | 3.91 | 4.16 | 4.45 | 4.45 |
| | Water flow rate [l/h] | | 762 | 789 | 901 | 1031 | 1180 | 1328 | 1495 | 1663 | 1820 | 1820 |
| Water 15 > 80 | Thermal P. [kW] | | 48.1 | 49.9 | 57.6 | 65.9 | 75.4 | 85.5 | 95.6 | 106.3 | 116.4 | 116.4 |
| | Absorbed power [kW] | (1) | 18.8 | 19.3 | 21.0 | 22.1 | 23.9 | 25.0 | 26.7 | 27.9 | 28.4 | 28.4 |
| | COP | | 2.56 | 2.58 | 2.74 | 2.98 | 3.16 | 3.42 | 3.58 | 3.81 | 4.10 | 4.10 |
| | Water flow rate [l/h] | | 637 | 660 | 762 | 872 | 998 | 1132 | 1265 | 1407 | 1540 | 1540 |
| Water 20 > 60 | Thermal P. [kW] | | 47.5 | 49.3 | 54.6 | 63.6 | 72.5 | 82.0 | 92.1 | 101.6 | 109.3 | 109.3 |
| | Absorbed power [kW] | (1) | 17.7 | 18.2 | 18.7 | 20.5 | 21.6 | 22.7 | 23.3 | 23.3 | 23.3 | 23.3 |
| | COP | | 2.69 | 2.71 | 2.92 | 3.10 | 3.35 | 3.61 | 3.95 | 4.36 | 4.69 | 4.69 |
| | Water flow rate [l/h] | | 1022 | 1060 | 1175 | 1367 | 1558 | 1762 | 1980 | 2184 | 2350 | 2350 |
| Water 20 > 70 | Thermal P. [kW] | | 46.3 | 48.1 | 55.8 | 63.0 | 72.5 | 82.0 | 91.5 | 102.8 | 109.9 | 109.9 |
| | Absorbed power [kW] | (1) | 18.2 | 18.7 | 19.9 | 21.1 | 22.7 | 23.9 | 25.0 | 26.2 | 26.2 | 26.2 |
| | COP | | 2.54 | 2.57 | 2.81 | 2.99 | 3.19 | 3.43 | 3.66 | 3.93 | 4.20 | 4.20 |
| | Water flow rate [l/h] | | 797 | 828 | 960 | 1083 | 1246 | 1410 | 1573 | 1768 | 1890 | 1890 |
| Water 20 > 80 | Thermal P. [kW] | | 44.6 | 46.9 | 54.6 | 63.6 | 73.1 | 82.0 | 92.1 | 102.8 | 109.9 | 109.9 |
| | Absorbed power [kW] | (1) | 18.7 | 19.4 | 21.0 | 22.7 | 24.4 | 25.6 | 26.8 | 27.9 | 28.4 | 28.4 |
| | COP | | 2.38 | 2.42 | 2.60 | 2.80 | 2.99 | 3.21 | 3.44 | 3.68 | 3.87 | 3.87 |
| | Water flow rate [l/h] | | 639 | 673 | 783 | 911 | 1047 | 1175 | 1320 | 1473 | 1575 | 1575 |

(1) Absorbed power [kW] Compressor + fans absorbed power

Absorbed power [kW]: Compressor + fans absorbed power
For external air temperatures exceeding 25° the performance remains constant
For inlet water temperatures below 10° the performance remains constant

*The technical specifications contained in the documentation are not binding. Enerblue reserves the right to make any modifications it deems necessary at any time for product improvement.*

# AIR/WATER unit operating limits

Operating limits for the sole production of water at high temperature

## HEATING ONLY

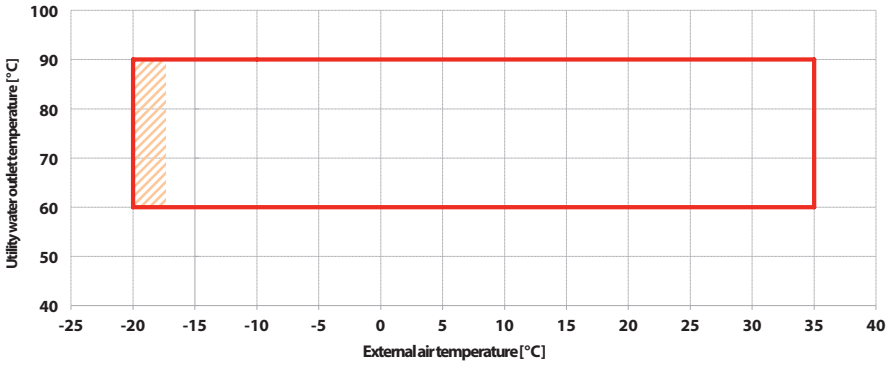


> The water inlet temperature must range between +5°C and +30°C.
> Unit operation beyond the limits described above may cause malfunctioning and breakage of the unit itself.
> For continuous operation in this area, contact the sales department

## COOLING RECOVERY

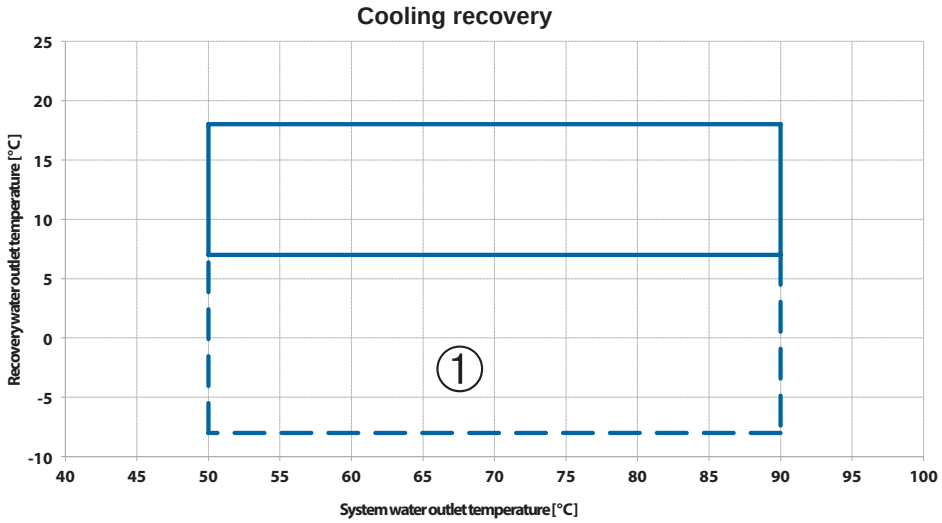


> The water inlet temperature must range between +5°C and +30°C
> ① Operating limits with glycoled water
> Unit operation beyond the limits described above may cause malfunctioning and breakage of the unit itself

The technical specifications contained in the documentation are not binding. Enerblue reserves the right to make any modifications it deems necessary at any time for product improvement.

# System diagrams

Examples of system diagrams

## CLOSED SYSTEM

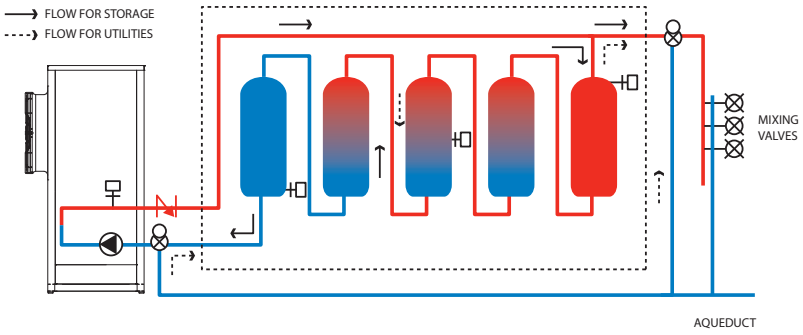


## OPEN SYSTEM

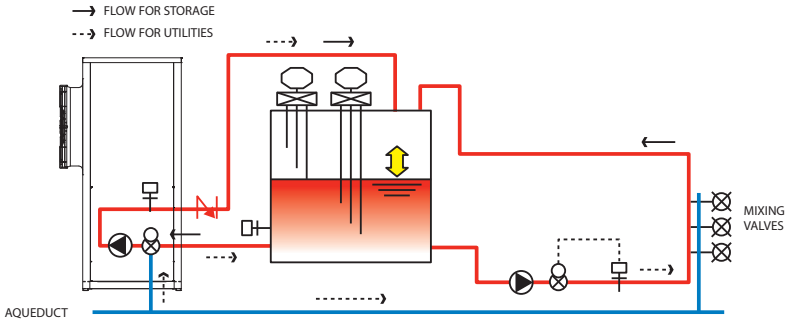


## SYSTEM COMBINED WITH BOILER

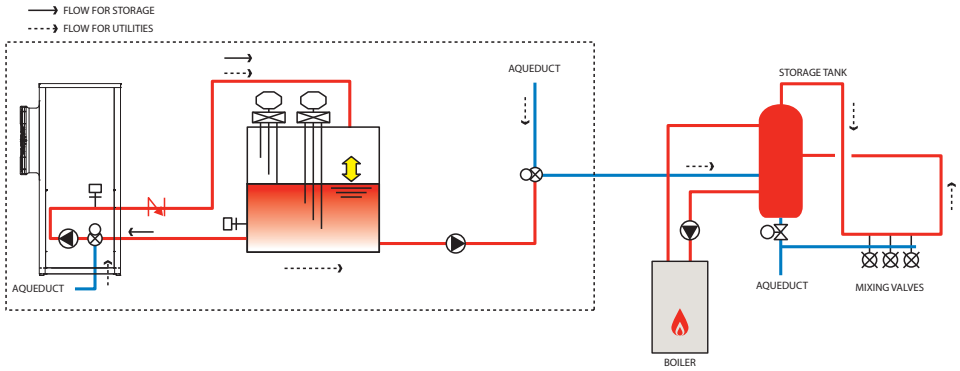


## DHW AND HIGH TEMPERATURE WATER SYSTEM

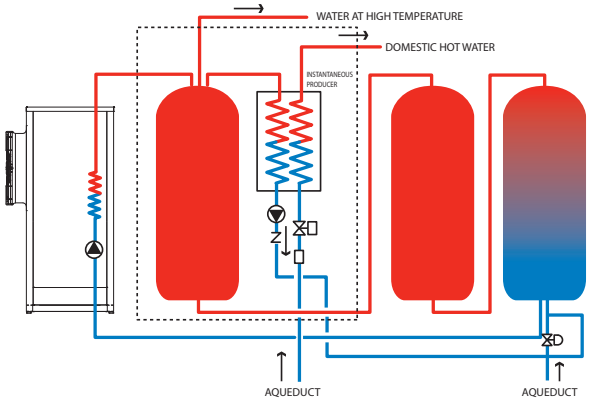

The technical specifications contained in the documentation are not binding. Enerblue reserves the right to make any modifications it deems necessary at any time for product improvement.

## Mod 18, 24 and 48

**External control mode via Analog-In 0-10 V**

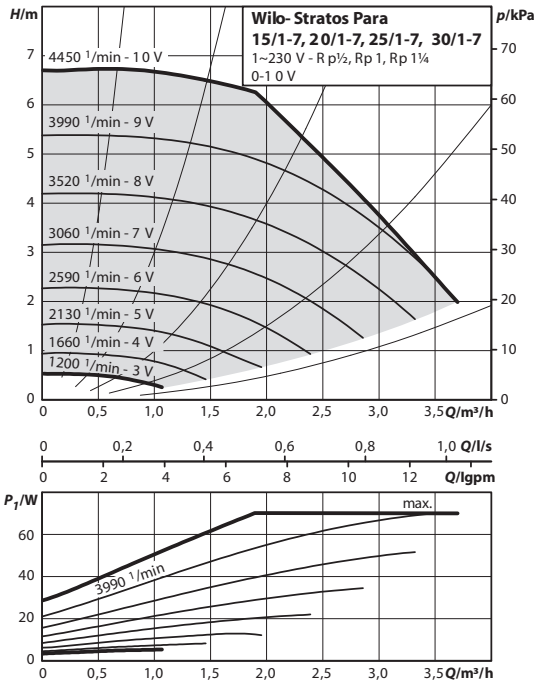


## Mod 100

**External control mode via Analog-In 0-10 V**

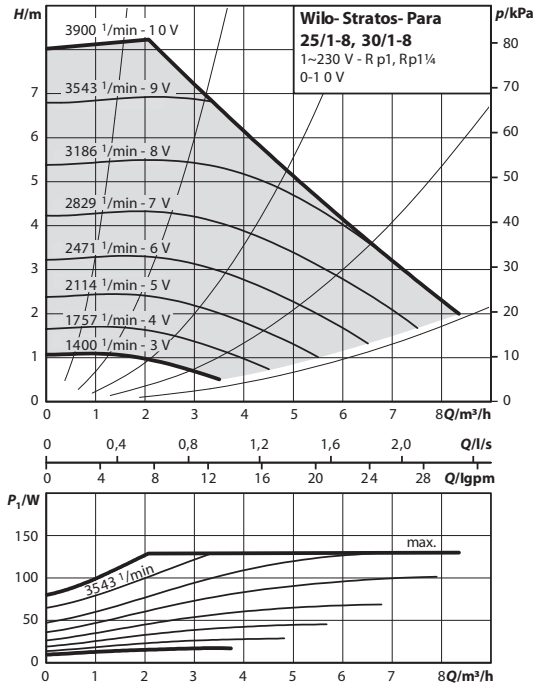

The technical specifications contained in the documentation are not binding. Enerblue reserves the right to make any modifications it deems necessary at any time for product improvement.

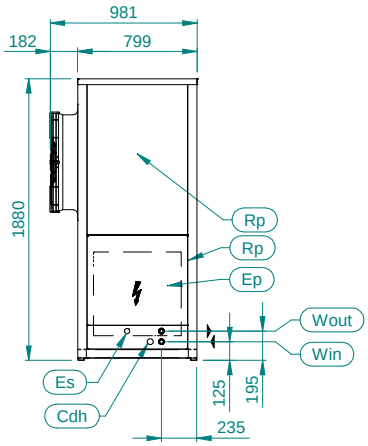


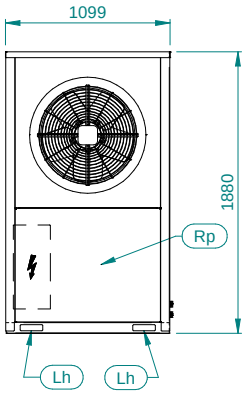


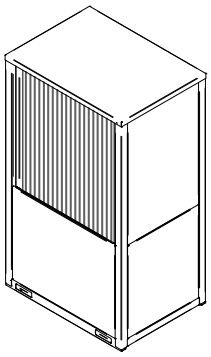

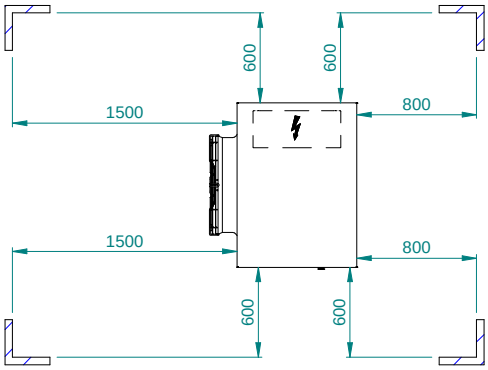


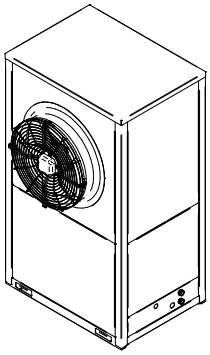

## SPAZI DI INSTALLAZIONE / CLEARANCES

| | |
|---|---|
| Ep | QUADRO ELETTRICO<br>ELECTRICAL PANEL |
| Es | INGRESSO ALIMENTAZIONE ELETTRICA<br>ELECTRICAL SUPPLY INLET |
| | SPAZI DI INSTALLAZIONE<br>CLEARANCES |
| Rp | PANNELLO ASPORTABILE<br>REMOVABLE PANEL |

| | | |
|---|---|---|
| Lh | FORI DI SOLLEVAMENTO<br>LIFTING HOLES | |
| Cdh | SCARICO CONDENSA<br>CONDENSATE DRAIN | |
| Win | INGRESSO ACQUA<br>WATER INLET | G 1" F |
| Wout | USCITA ACQUA<br>WATER OUTLET | G 1" F |

| DIMENSIONI - DIMENSIONS | | |
|---|---|---|
| LUNGHEZZA<br>WIDTH | PROFONDITA'<br>DEPTH | ALTEZZA<br>HEIGHT |
| 1099 | 981 | 1880 |

The technical specifications contained in the documentation are not binding. Enerblue reserves the right to make any modifications it deems necessary at any time for product improvement.

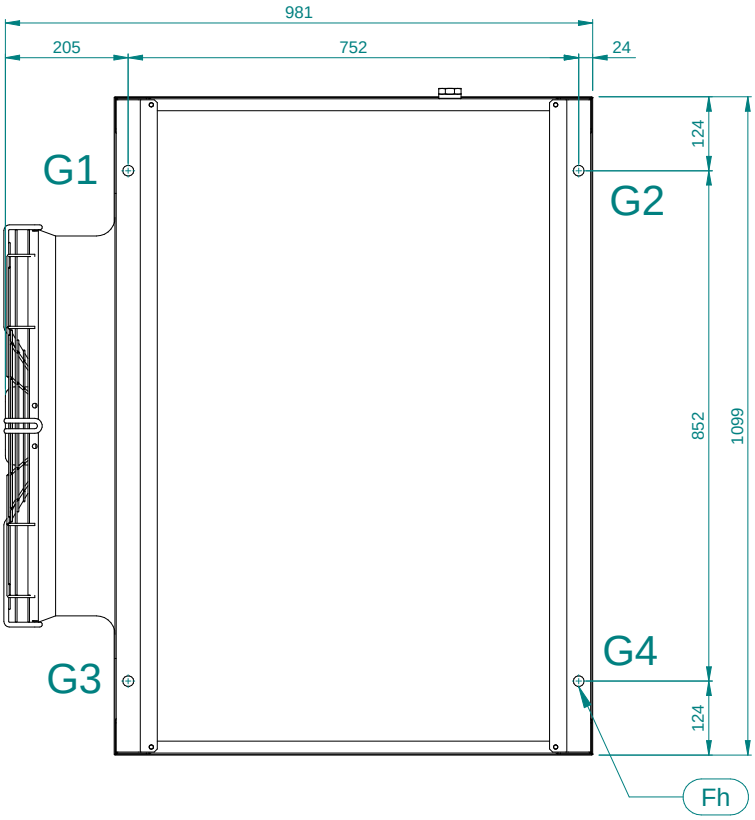


| G.. | PUNTI DI APPOGGIO ANTIVIBRANTI<br>VIBRATION DAMPER FOOT HOLDS | |
|---|---|---|
| Fh | FORI DI FISSAGGIO<br>FIXING HOLES | Ø18 |

| MODELLO<br>MODEL | PESO<br>WEIGHT<br>(Kg) | PESO IN FUNZIONE<br>OPERATING WEIGHT<br>(Kg) | G1 | G2 | G3 | G4 |
|---|---|---|---|---|---|---|
| 18 | - | - | - | - | - | - |



The technical specifications contained in the documentation are not binding. Enerblue reserves the right to make any modifications it deems necessary at any time for product improvement.

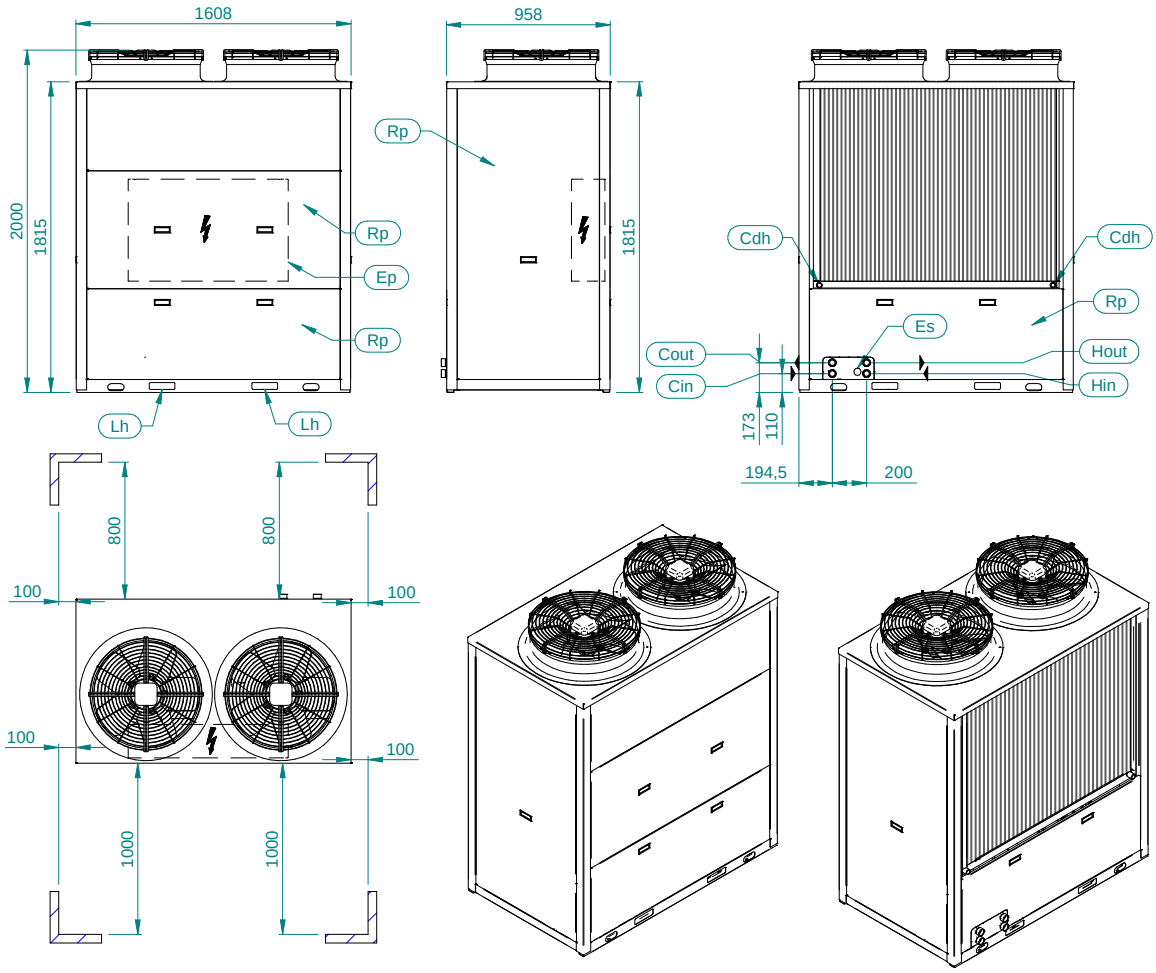


## SPAZI DI INSTALLAZIONE / CLEARANCES

| | | | | | |
|---|---|---|---|---|---|
| Ep | QUADRO ELETTRICO<br>ELECTRICAL PANEL | Cdh | SCARICO CONDENSA<br>CONDENSATE DRAIN | | |
| Es | INGRESSO ALIMENTAZIONE ELETTRICA<br>ELECTRICAL SUPPLY INLET | Cin | INGRESSO ACQUA FREDDA<br>COLD WATER INLET | G 1" 1\2 F | |
| | SPAZI DI INSTALLAZIONE<br>CLEARANCES | Cout | USCITA ACQUA FREDDA<br>COLD WATER OUTLET | G 1" 1\2 F | |
| Rp | PANNELLO ASPORTABILE<br>REMOVABLE PANEL | Hin | INGRESSO ACQUA CALDA<br>HOT WATER INLET | G 1" 1\2 F | |
| Lh | FORI DI SOLLEVAMENTO<br>LIFTING HOLES | Hout | USCITA ACQUA CALDA<br>HOT WATER OUTLET | G 1" 1\2 F | |

| DIMENSIONI - DIMENSIONS | | |
|---|---|---|
| LUNGHEZZA<br>WIDTH | PROFONDITA'<br>DEPTH | ALTEZZA<br>HEIGHT |
| 1608 | 958 | 2000 |

The technical specifications contained in the documentation are not binding. Enerblue reserves the right to make any modifications it deems necessary at any time for product improvement.

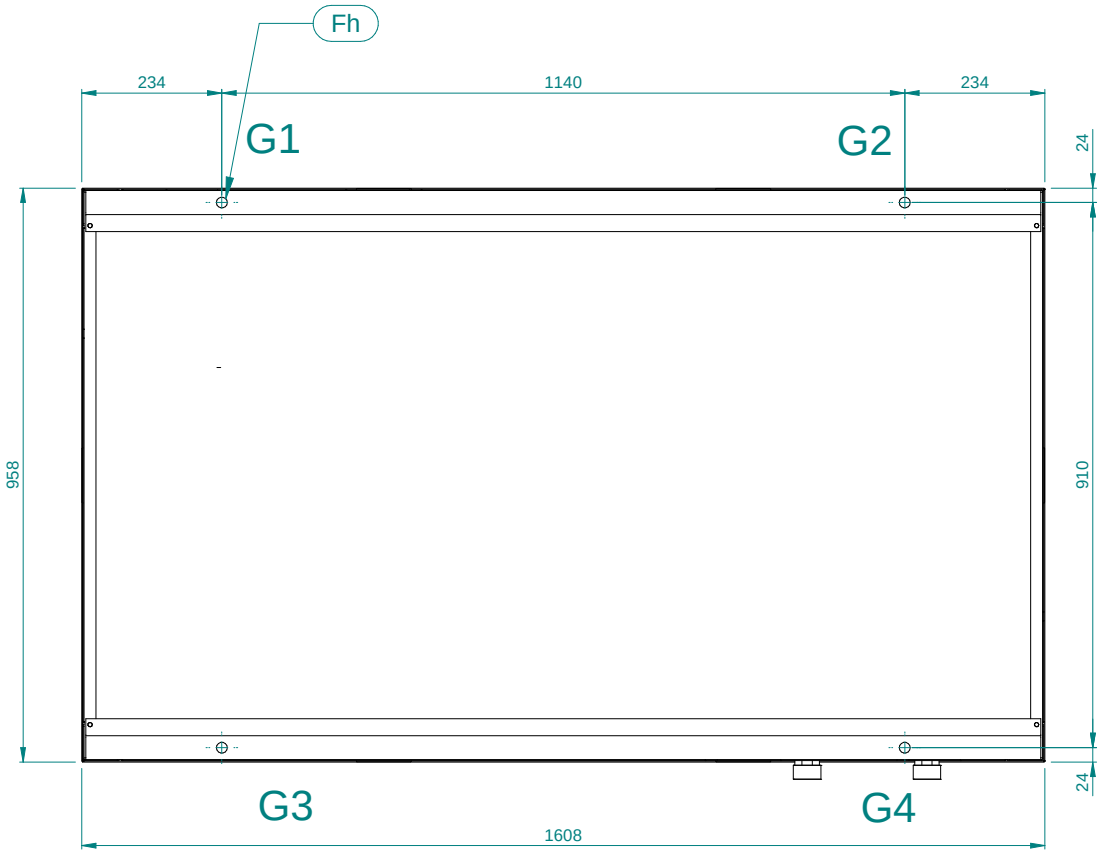


| | | |
|---|---|---|
| G.. | PUNTI DI APPOGGIO ANTIVIBRANTI | |
| | VIBRATION DAMPER FOOT HOLDS | |
| Fh | FORI DI FISSAGGIO | Ø18 |
| | FIXING HOLES | |

| MODELLO MODEL | PESO WEIGHT (Kg) | PESO IN FUNZIONE OPERATING WEIGHT (Kg) | G1 | G2 | G3 | G4 |
|---|---|---|---|---|---|---|
| 24 | - | - | - | - | - | - |





The technical specifications contained in the documentation are not binding. Enerblue reserves the right to make any modifications it deems necessary at any time for product improvement.

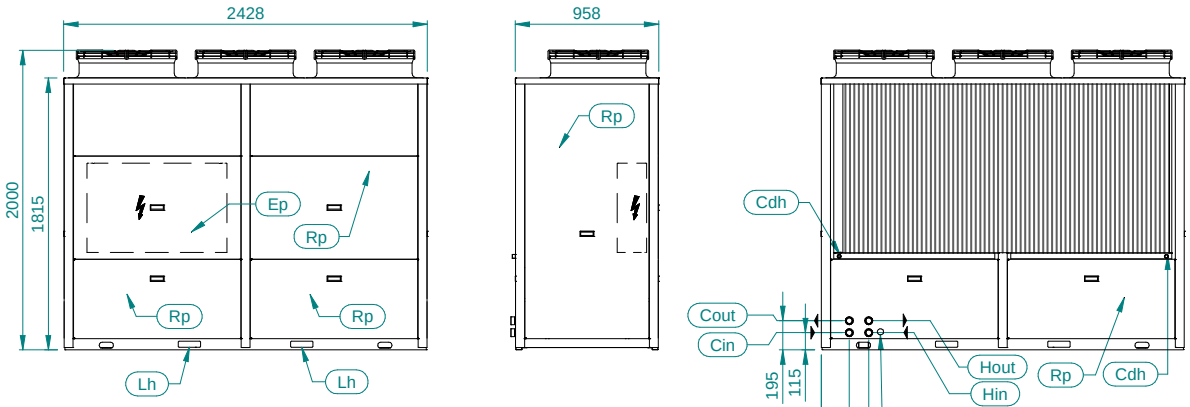


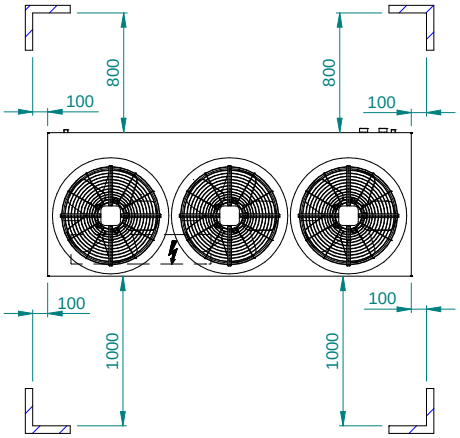


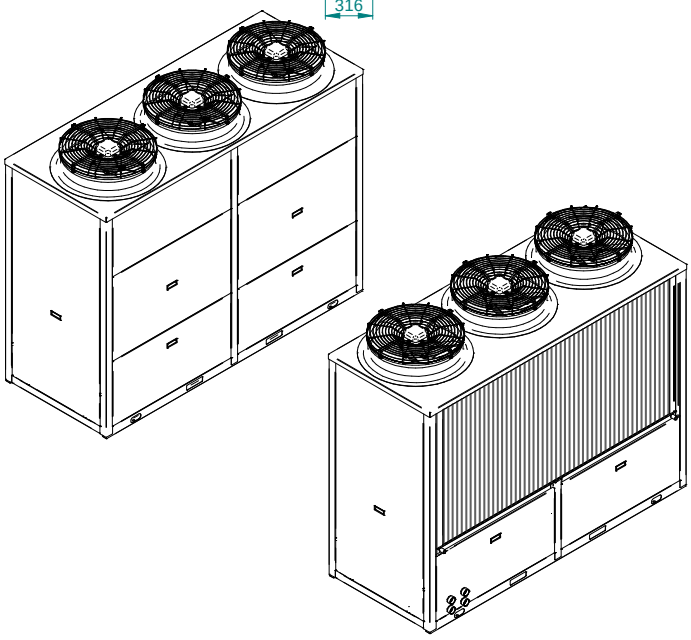

SPAZI DI INSTALLAZIONE / CLEARANCES

| | | | | | | | | |
|---|---|---|---|---|---|---|---|---|
| Ep | QUADRO ELETTRICO<br>ELECTRICAL PANEL | | Cdh | SCARICO CONDENSA<br>CONDENSATE DRAIN | | DIMENSIONI - DIMENSIONS | | |
| Es | INGRESSO ALIMENTAZIONE ELETTRICA<br>ELECTRICAL SUPPLY INLET | | Cin | INGRESSO ACQUA FREDDA<br>COLD WATER INLET | G 1" 1\2 F | LUNGHEZZA<br>WIDTH | PROFONDITA'<br>DEPTH | ALTEZZA<br>HEIGHT |
| | SPAZI DI INSTALLAZIONE<br>CLEARANCES | | Cout | USCITA ACQUA FREDDA<br>COLD WATER OUTLET | G 1" 1\2 F | 2428 | 958 | 2000 |
| Rp | PANNELLO ASPORTABILE<br>REMOVABLE PANEL | | Hin | INGRESSO ACQUA CALDA<br>HOT WATER INLET | G 1" 1\2 F | | | |
| Lh | FORI DI SOLLEVAMENTO<br>LIFTING HOLES | | Hout | USCITA ACQUA CALDA<br>HOT WATER OUTLET | G 1" 1\2 F | | | |

The technical specifications contained in the documentation are not binding. Enerblue reserves the right to make any modifications it deems necessary at any time for product improvement.

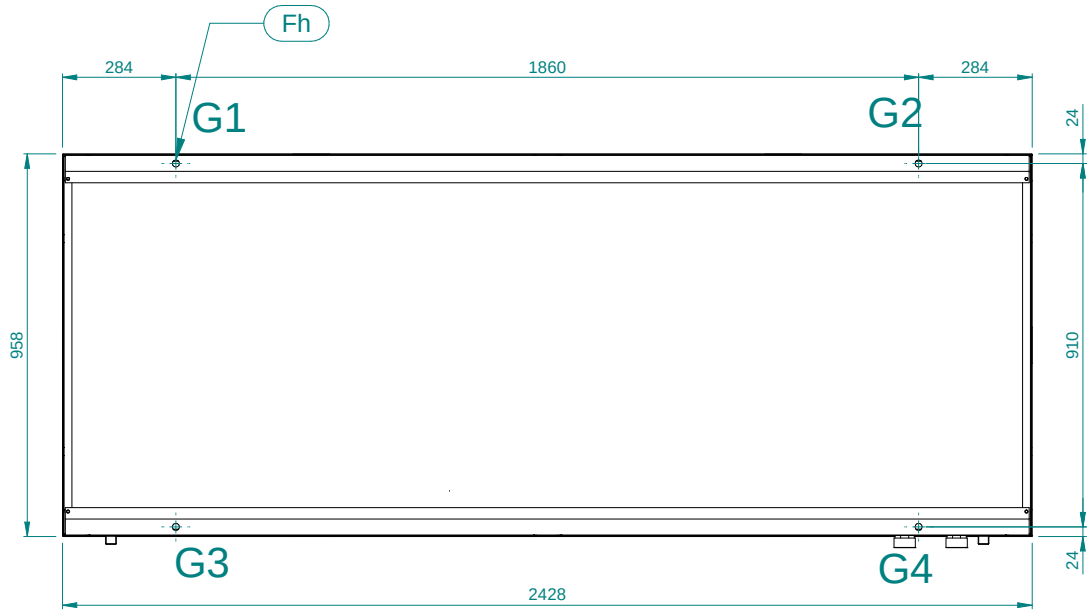






| | | |
|---|---|---|
| G.. | PUNTI DI APPOGGIO ANTIVIBRANTI<br>VIBRATION DAMPER FOOT HOLDS | |
| Fh | FORI DI FISSAGGIO<br>FIXING HOLES | Ø18 |

| MODELLO<br>MODEL | PESO<br>WEIGHT<br>(Kg) | PESO IN FUNZIONE<br>OPERATING WEIGHT<br>(Kg) | G1 | G2 | G3 | G4 |
|---|---|---|---|---|---|---|
| 48 | - | - | - | - | - | - |

The technical specifications contained in the documentation are not binding. Enerblue reserves the right to make any modifications it deems necessary at any time for product improvement.

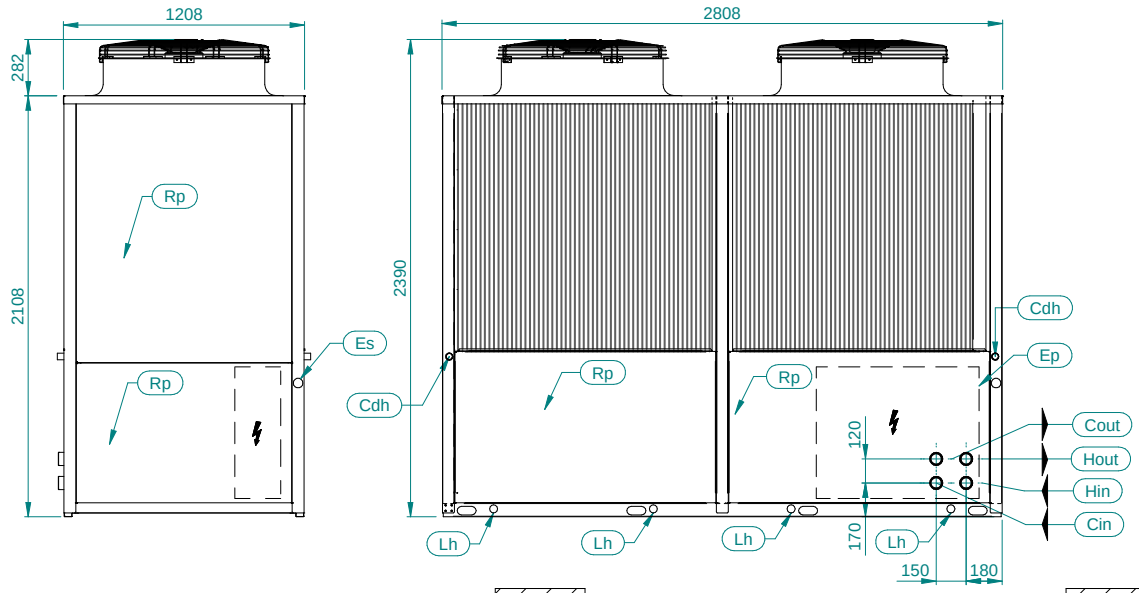


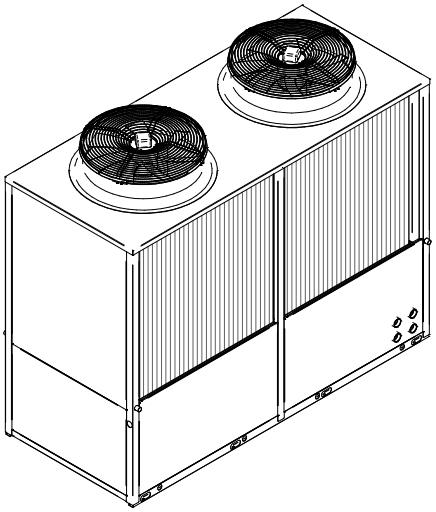

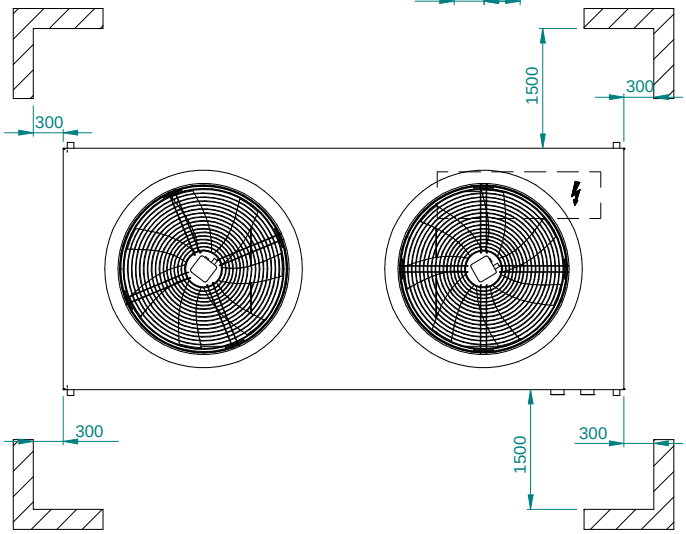


SPAZI DI INSTALLAZIONE / CLEARANCES

| | | |
|---|---|---|
| Ep | QUADRO ELETTRICO<br>ELECTRICAL PANEL | |
| Es | INGRESSO ALIMENTAZIONE ELETTRICA<br>ELECTRICAL SUPPLY INLET | |
| Lh | FORI DI SOLLEVAMENTO<br>LIFTING HOLES | |
| Rp | PANNELLO ASPORTABILE<br>REMOVABLE PANEL | |
| Cdh | SCARICO CONDENSA VERSIONE HP<br>CONDENSATE DRAIN HP VERSION | ø20 |

| | | |
|---|---|---|
| Cin | INGRESSO ACQUA FREDDO<br>COLD WATER INLET | G 2" F |
| Cout | USCITA ACQUA FREDDO<br>COLD WATER OUTLET | G 2" F |
| Hin | INGRESSO ACQUA CALDO<br>HOT WATER INLET | G 2" F |
| Hout | USCITA ACQUA CALDO<br>HOT WATER OUTLET | G 2" F |

| DIMENSIONI / DIMENSIONS | | |
|---|---|---|
| LUNGHEZZA<br>WIDTH | PROFONDITA'<br>DEPTH | ALTEZZA<br>HEIGHT |
| 2808 | 1208 | 2390 |

The technical specifications contained in the documentation are not binding. Enerblue reserves the right to make any modifications it deems necessary at any time for product improvement.

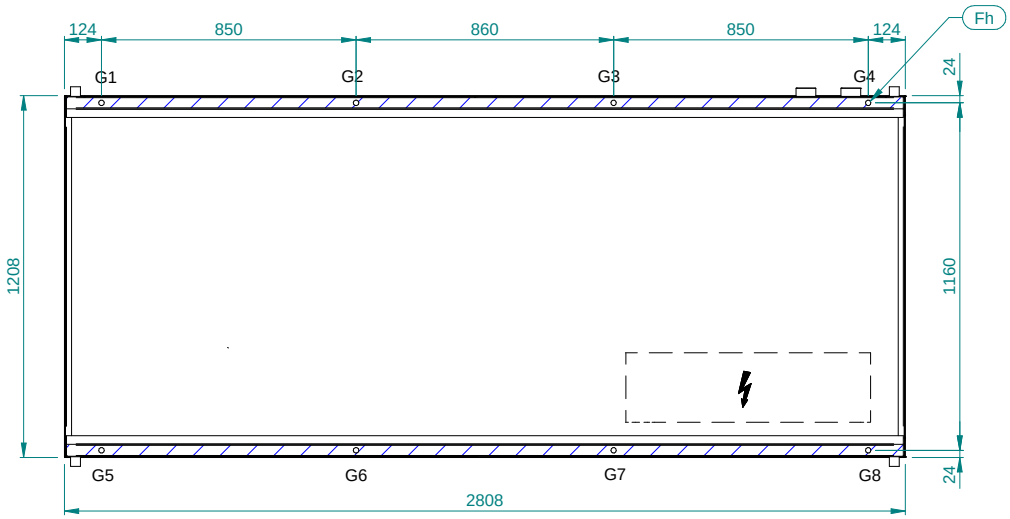


| MODELLO MODEL | PESO WEIGHT (KG) | PESO IN FUNZIONE OPERATING WEIGHT (KG) |
|---|---|---|
| 100 | - | - |

| | | |
|---|---|---|
| Fh | FORI DI FOSSAGGIO<br>FIXING HOLES | Ø18 |
| G.. | PUNTI DI APPOGGIO ANTIVIBRANTI<br>VIBRATION DAMPER FOOT HOLDS | |

| | G1 | G2 | G3 | G4 | G5 | G6 | G7 | G8 |
|---|---|---|---|---|---|---|---|---|
| 100 | - | - | - | - | - | - | - | - |





The technical specifications contained in the documentation are not binding. Enerblue reserves the right to make any modifications it deems necessary at any time for product improvement.

052014_001

ENERBLUE

climacon


Ajgk_aml L,T,

**Registered office**

Ipsglqrp__r2+7/4. Jmicpcl

Rcjß .7-115,65,55

D_vß .7-115,66,5.

info@ajgk_aml.`c

www.ajgk_aml,`c